SHEET 1 OF 1

FIELD BOOK NO:
E - 1217

DATE: 7/22/75

(2)

AREA "C" EUFAULA LAKE
CANADIAN RIVER, OKLAHOMA
SECTION AND QUARTER SECTION CORNER REFERENCES FOR SECTION 25, T 8 N-R 15 E
PITTSBURG COUNTY, OKLAHOMA

See Section 26

NW COR.

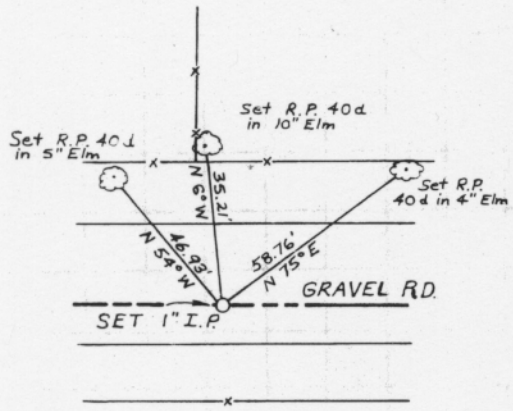

N/4 COR.

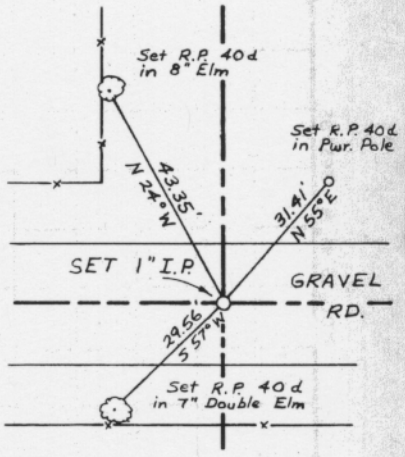

NE COR.

See Section 26

W/4 COR.

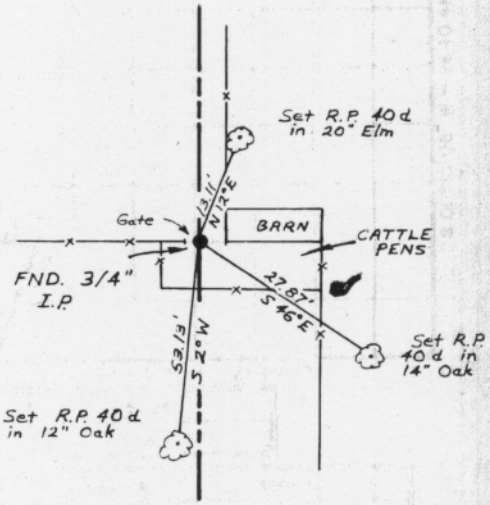

E/4 COR.

Set By Others

SE COR.

Set By Others

SW COR.

Set By Others

S/4 COR.

LEGEND

- △ MONUMENT SET
- ▲ MONUMENT FND.
- ⊙ OKLA. ST. HWY. DEPT. COR.
- ○ IRON PINS SET
- ● IRON PINS FND.
- ⬡ STONES FND.
- □ REF. MON. SET