EUFAULA LAKE

SECTION AND QUARTER SECTION
CORNER REFERENCES FOR

SECTION 18, T 6 N, R 16 E, PITTSBURG COUNTY

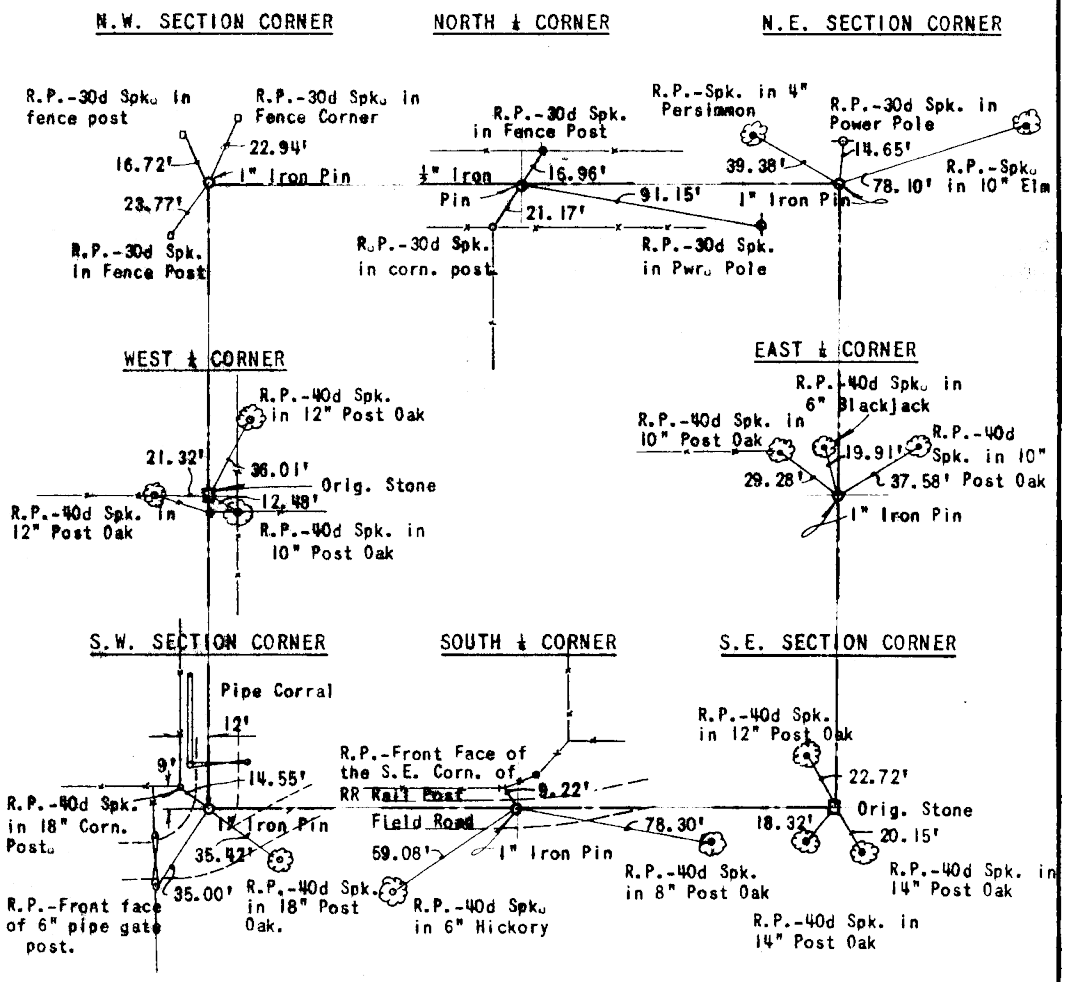

Scale: 1"=50'
Date: August 2, 1977
Field Book No. E-1316
Sullivan & Gilbert, Inc.